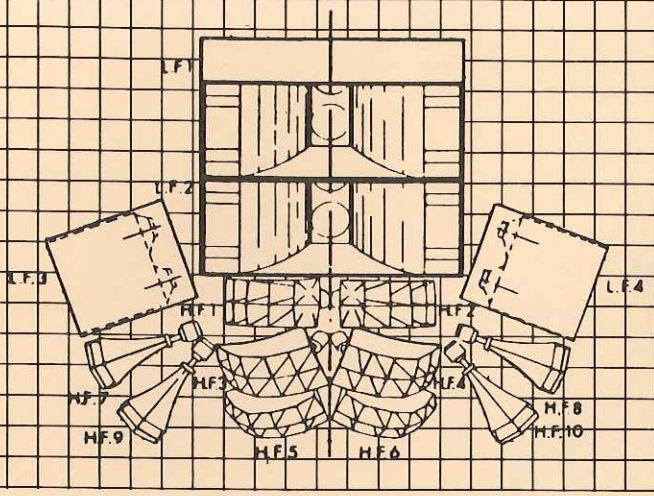

ALTEC LANSING APPLICATIONS NOTES

AN-11

CONSTRUCTION PLANS FOR LOW-FREQUENCY ENCLOSURES

This Applications Note presents drawings and plans for many Altec Lansing low-frequency enclosures. These should guide the builder experienced in basic joinery and loudspeaker construction in making repair parts, or in building these cabinets, if need be.

In general, any low-frequency enclosure drawing not included in this group is not available for release at the present time. Your suggestions for other enclosures you would like included in future editions are welcome.

The reader should also refer to AN-5, "Customizing Altec Lansing Loudspeaker Enclosures," for instructions on adapting some of these cabinet designs to various loudspeakers.

AN-12 contains cabinet drawings for Altec Lansing 8000-series cabinets.

CONTENTS

Cabinet for A8 Voice of the Theatre® System 2
210A Cabinet 3
211 Cabinet 4
612 Cabinet 5
614 Cabinet 6
620 Cabinet 7
815 Cabinet 8
816 Cabinet 9
817 Cabinet 10
828 Cabinet 11
Cabinet for 849 Column Loudspeaker 12
930 Cabinet 13
937 Cabinet 14
Cabinet for 1230 Loudspeaker System 15
Cabinet for 1233 Loudspeaker System 16
Cabinet for 1234 Loudspeaker System 17
Cabinet for 9842 Studio Monitor System 18
Cabinet for 9844 Studio Monitor System 19
Cabinet for 9849 Studio Monitor System 20

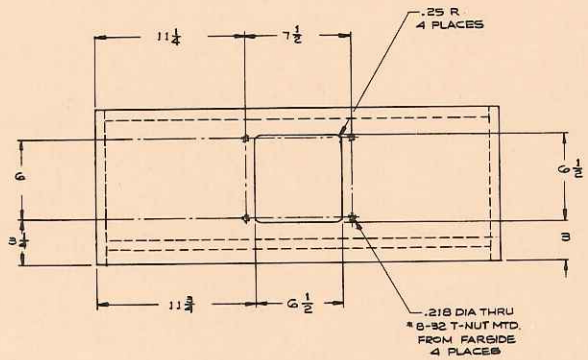

DETAIL B

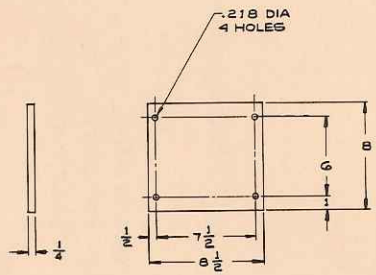

DETAIL C.

MATERIAL 1/4 THK. MASONITE

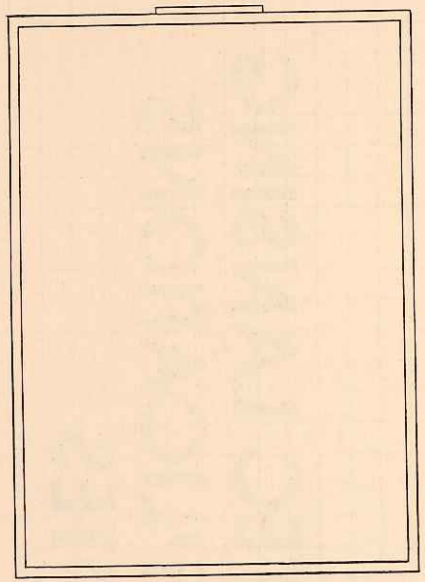

REAR VIEW.

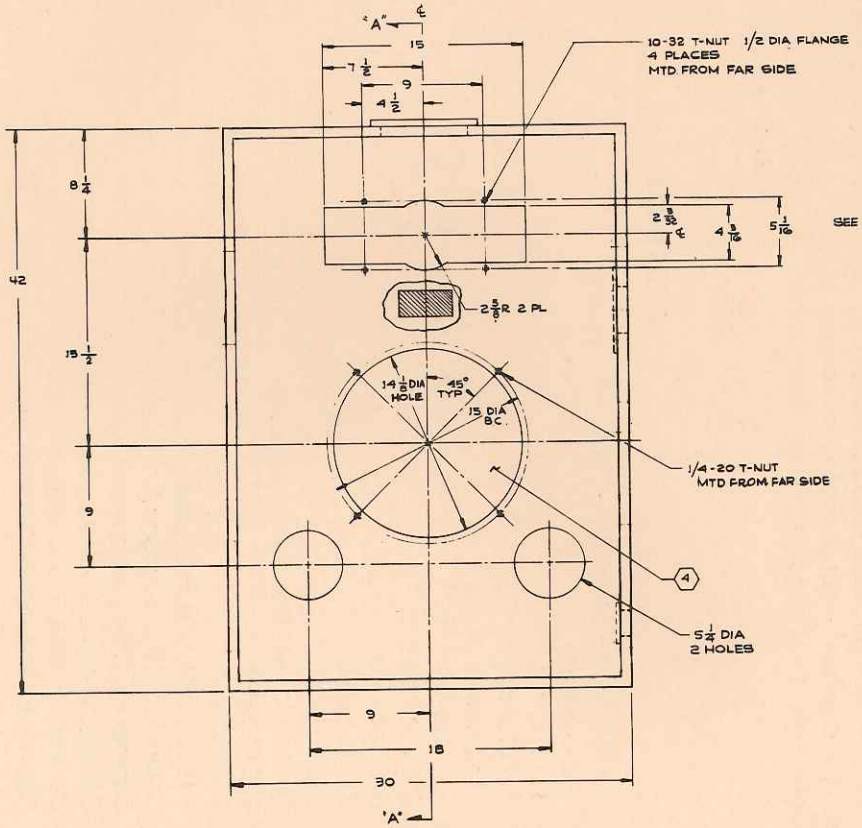

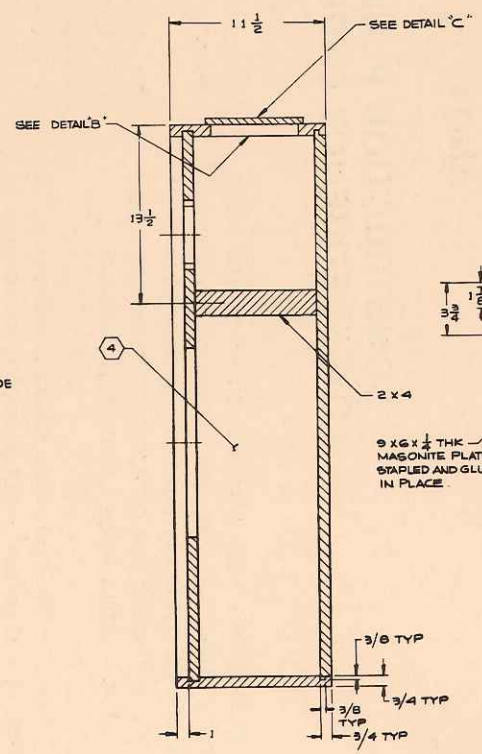

SECTION A-A

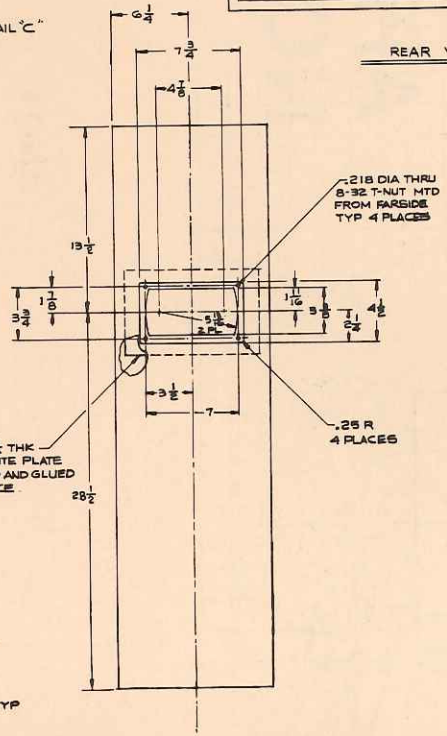

(4) COVER RIGHT SIDE, LEFT SIDE AND BACK SIDE WITH 1 1/2 THK FIBERGLASS QC 701 STAPLE IN PLACE.
(3) JOINTERY: ALL JOINTS & CLEATS TO BE SOLIDLY GLUED & NAILED. NO AIR LEAKS OR RATTLE PERMITTED PER ALTEC SPEC 3A 500.
(2) FINISH: DARK GRAY INSTRUMENT LACQUER FULLER. SAND AND FILL STAPLE HOLES BEFORE PAINTING PER ALTEC SPEC 3A 501.
(1) MATERIAL: 3/4 PLYWOOD. MDO GRADE, CLEATS ALDER LUMBER, BRACE PINE LUMBER.

NOTES: UNLESS OTHERWISE SPECIFIED

Cabinet for A8 Voice of the Theatre® System

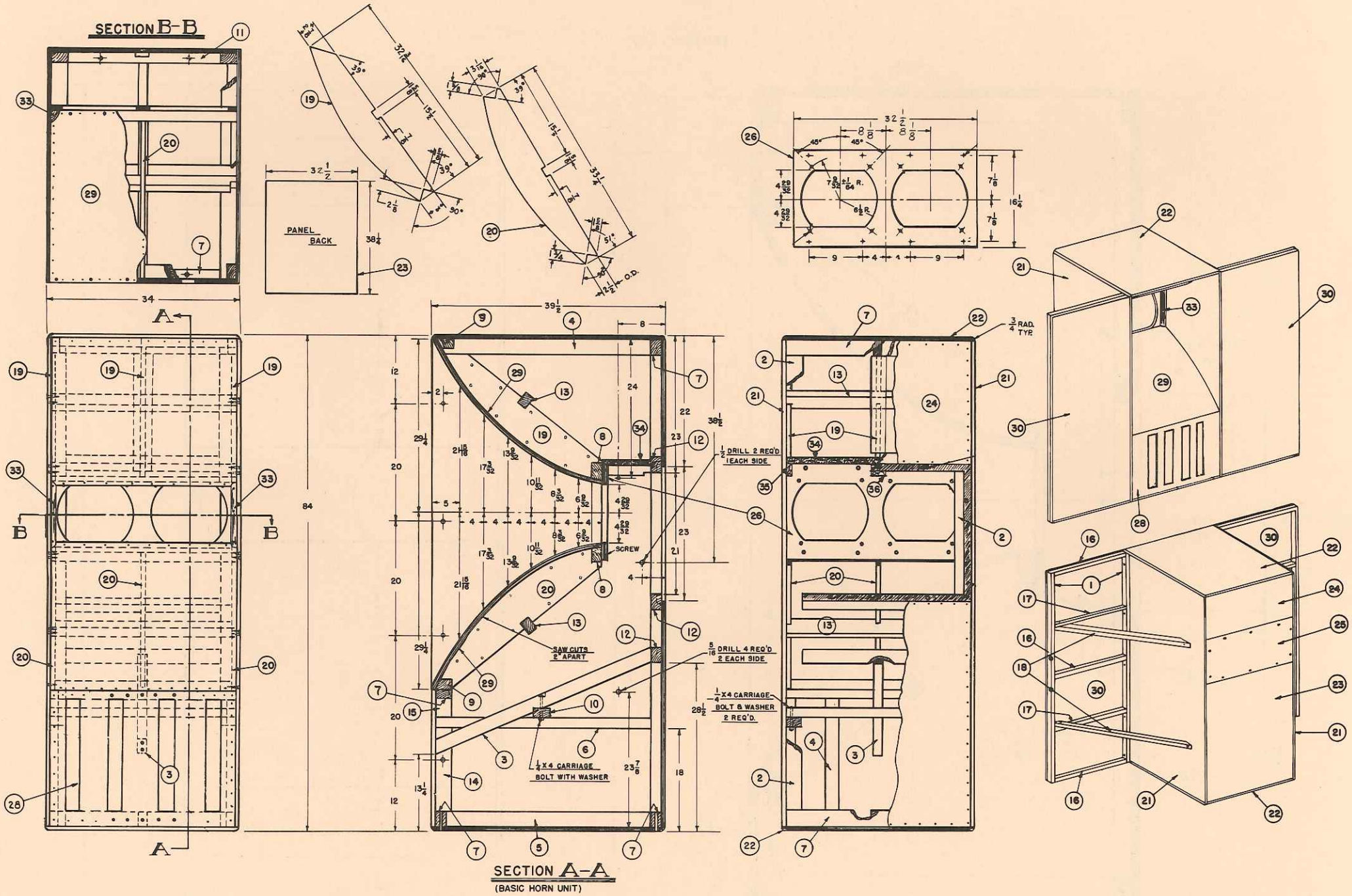

210A Cabinet

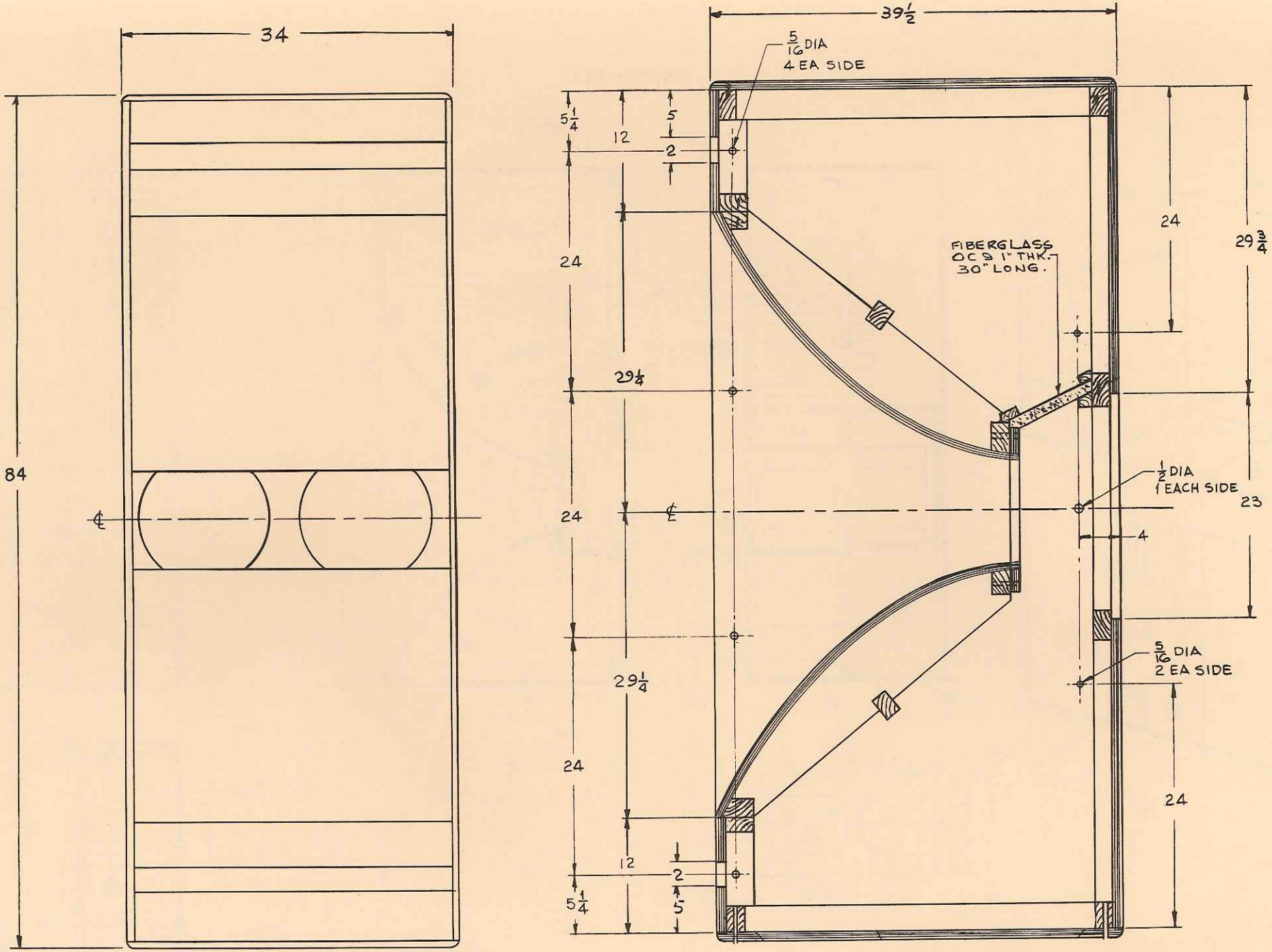
34
84
39½
5/16 DIA
4 EA SIDE
5¼
12
5
2
24
29¼
24
29¼
24
12
2
5¼
5
FIBERGLASS
OC 9 1" THK.
30" LONG.
24
29¾
½ DIA
1 EACH SIDE
23
4
5/16 DIA
2 EA SIDE
24

211 Cabinet

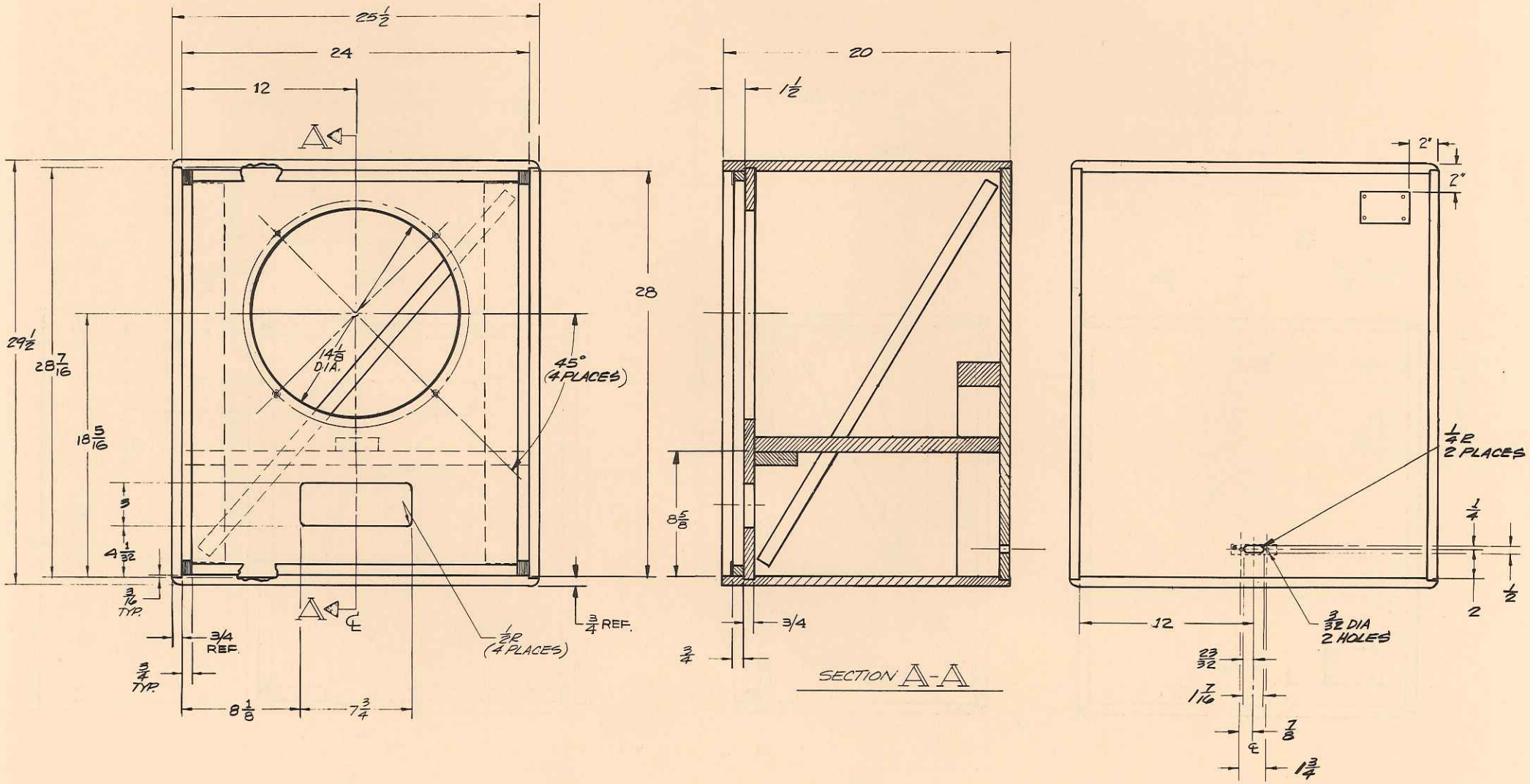
25 1/2
24
12
A
29 1/2
28 7/16
18 5/16
14 1/8 DIA.
45° (4 PLACES)
28
3
4 1/32
3/16 TYP.
3/4 REF.
3/4 TYP.
8 1/8
7 3/4
1/2R (4 PLACES)
3/4 REF.
20
1 1/2
8 5/8
3/4
3/4
SECTION A-A
2"
2"
1/4R 2 PLACES
1/4
1/2
2
12
3/32 DIA 2 HOLES
23/32
1 7/16
7/8
1 3/4

612 Cabinet

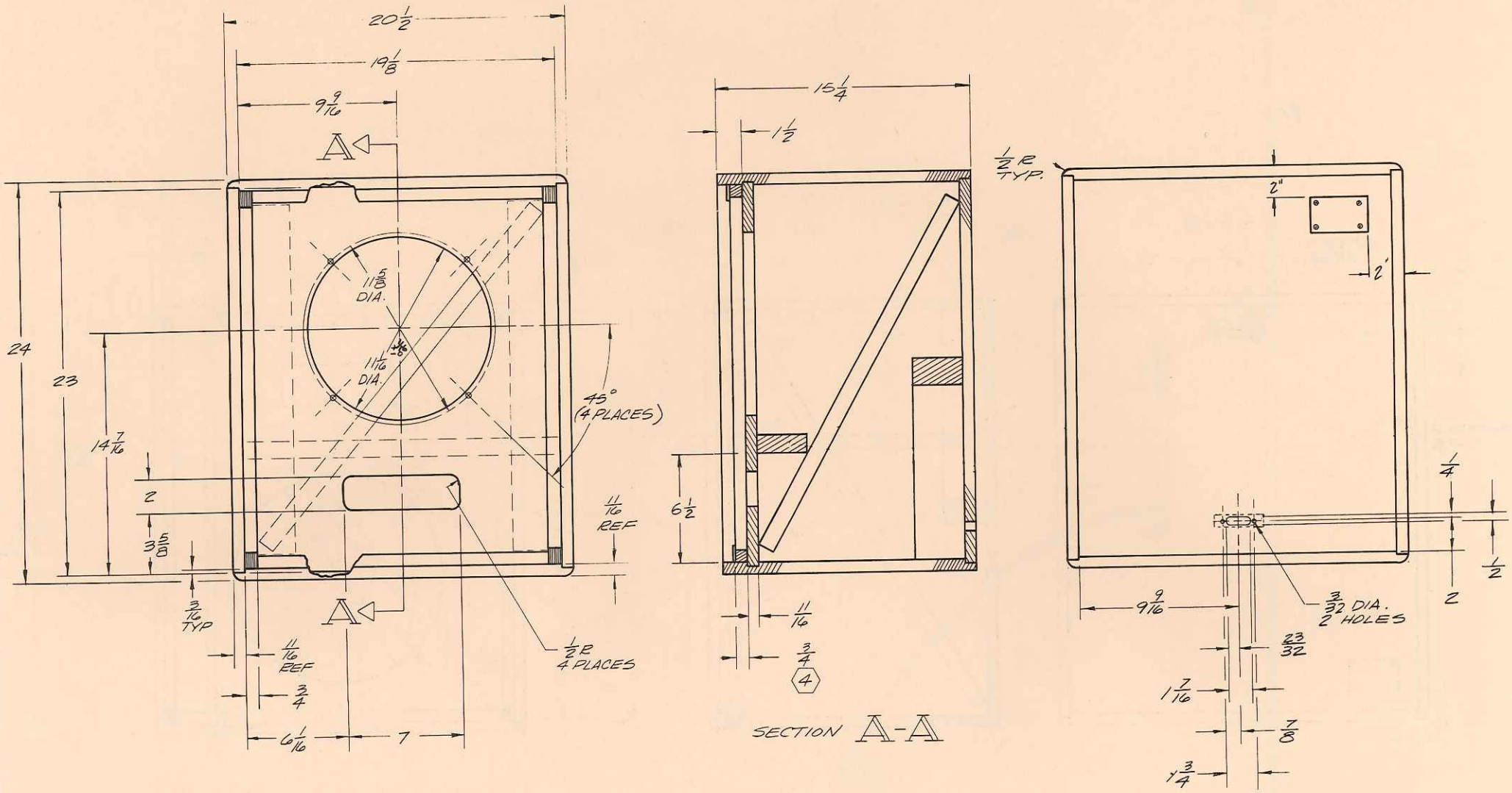
20 1/2
19 1/8
9 9/16
A
24
23
14 7/16
2
3 5/8
3/16 TYP
11/16 REF
3/4
6 1/16
7
11 5/8 DIA.
11 1/16 DIA.
45° (4 PLACES)
11/16 REF
1/2 R 4 PLACES
15 1/4
1 1/2
6 1/2
11/16
3/4
4
SECTION A-A
1/2 R TYP.
2"
2'
1/4
1/2
2
9 9/16
3/32 DIA. 2 HOLES
23/32
1 7/16
7/8
1 3/4

614 Cabinet

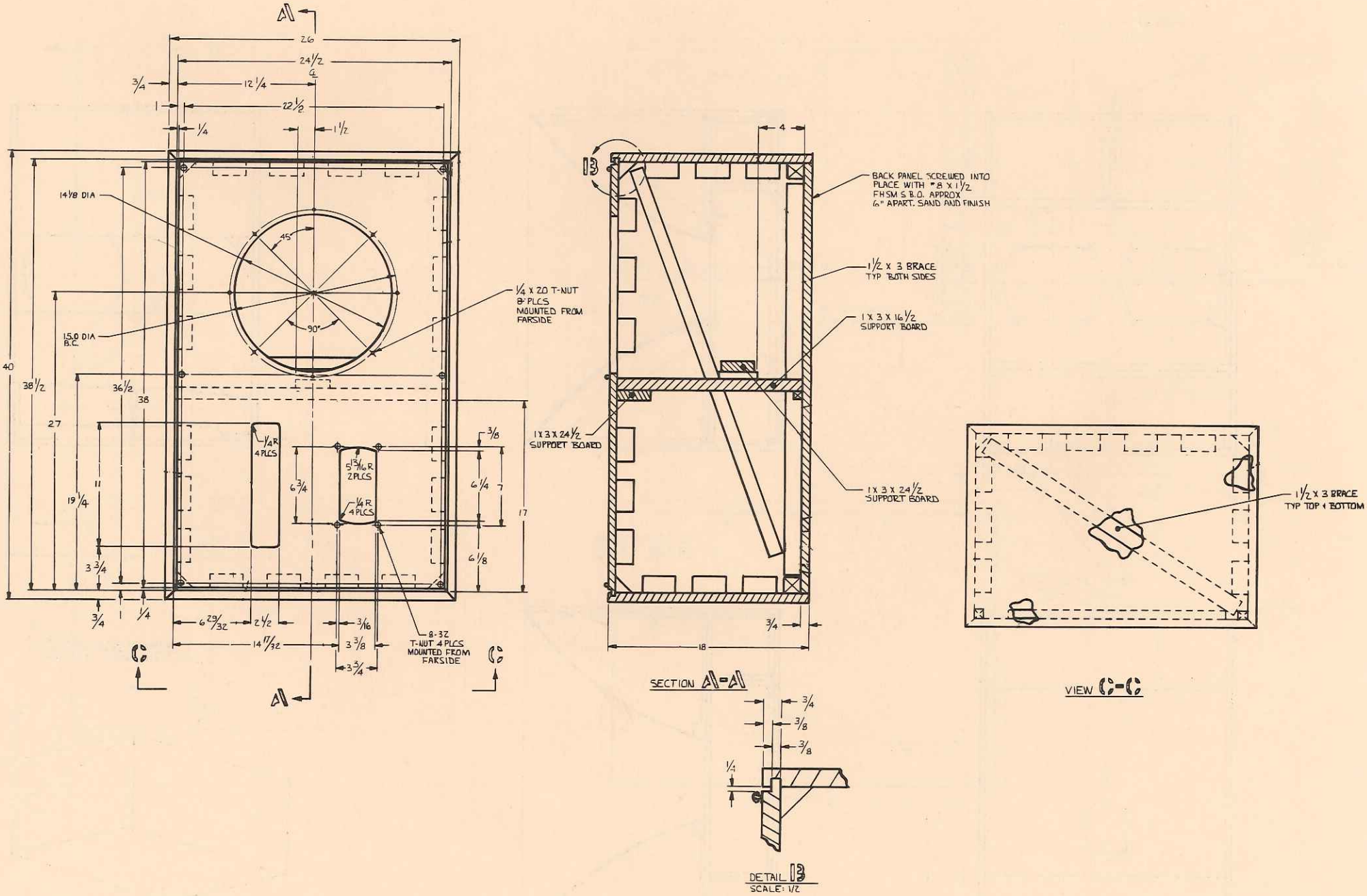
26
24 1/2
12 1/4
22 1/2
3/4
1
1/4
1 1/2
14 1/8 DIA
45°
90°
15.0 DIA B.C.
1/4 X 20 T-NUT 8 PLCS MOUNTED FROM FARSIDE
40
38 1/2
36 1/2
38
27
19 1/4
11
3 3/4
1/4R 4 PLCS
5 13/16 R 2 PLCS
1/4 R 4 PLCS
6 3/4
3/8
6 1/4
17
6 1/8
6 29/32
2 1/2
3/16
14 17/32
3 3/8
3 3/4
8-32 T-NUT 4 PLCS MOUNTED FROM FARSIDE
4
BACK PANEL SCREWED INTO PLACE WITH #8 X 1 1/2 FHSM S.B.O. APPROX 6" APART. SAND AND FINISH
1 1/2 X 3 BRACE TYP BOTH SIDES
1 X 3 X 16 1/2 SUPPORT BOARD
1 X 3 X 24 1/2 SUPPORT BOARD
1 X 3 X 24 1/2 SUPPORT BOARD
18
SECTION A-A
1 1/2 X 3 BRACE TYP TOP & BOTTOM
VIEW C-C
3/4
3/8
3/8
1/4
DETAIL B
SCALE: 1/2

620 Cabinet

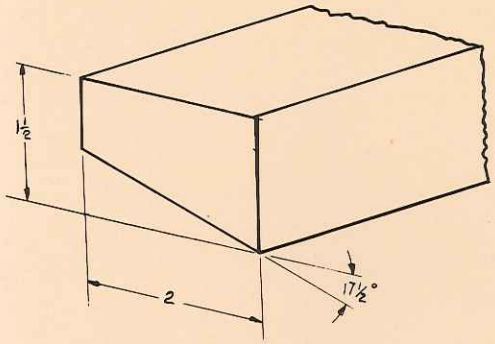

DETAIL "A" OF CROSSMEMBER ITEM 8
TOP CROSSMEMBER SHOWN
BOTTOM CROSSMEMBER INVERTED

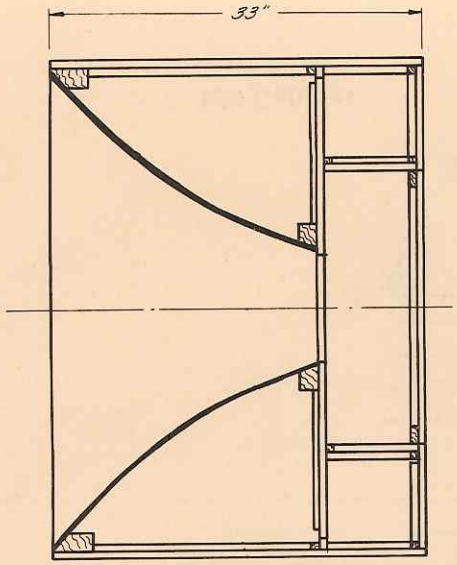

SECT B B

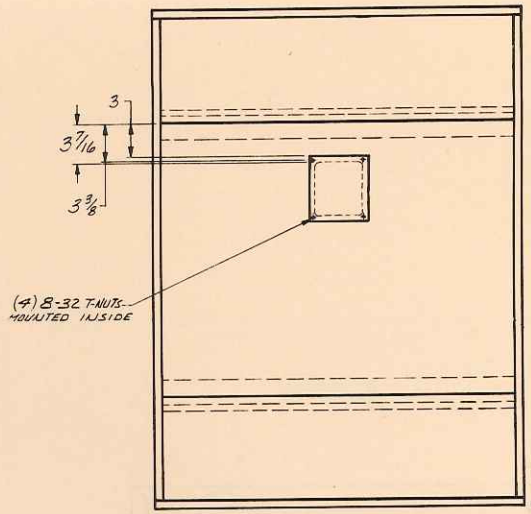

REAR VIEW
WITH REAR PANEL

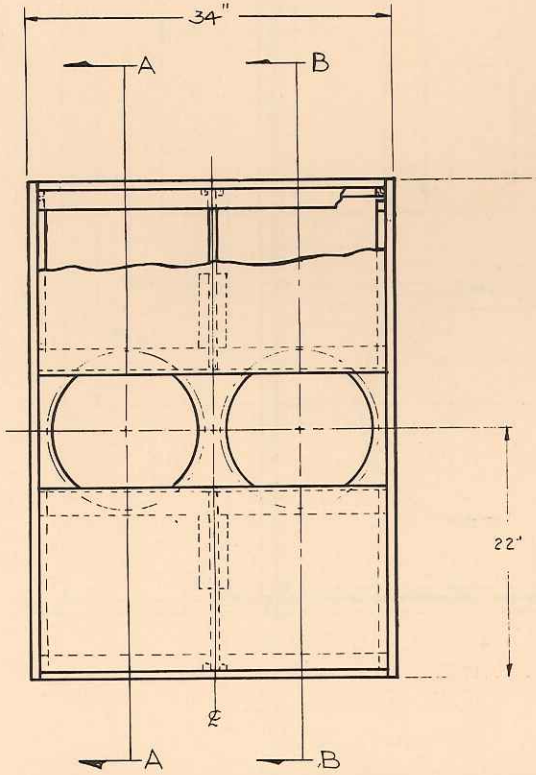

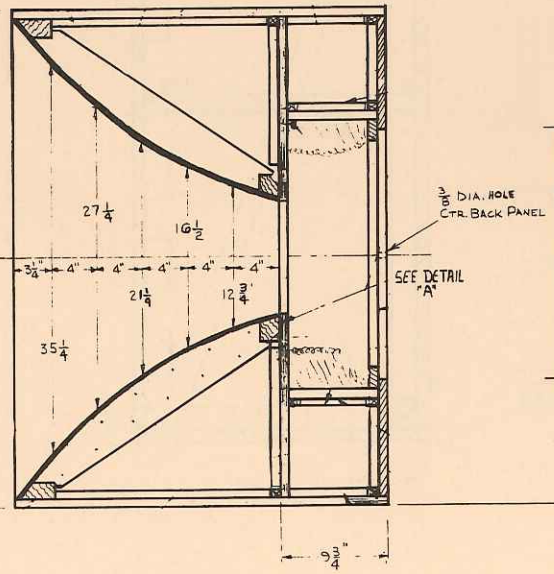

SECTION - A-A

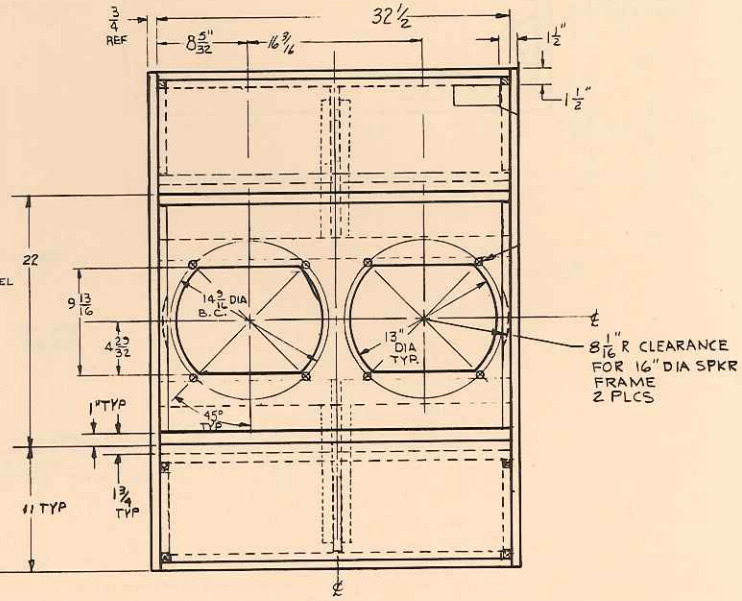

REAR VIEW
REAR PANEL REMOVED

815 Cabinet

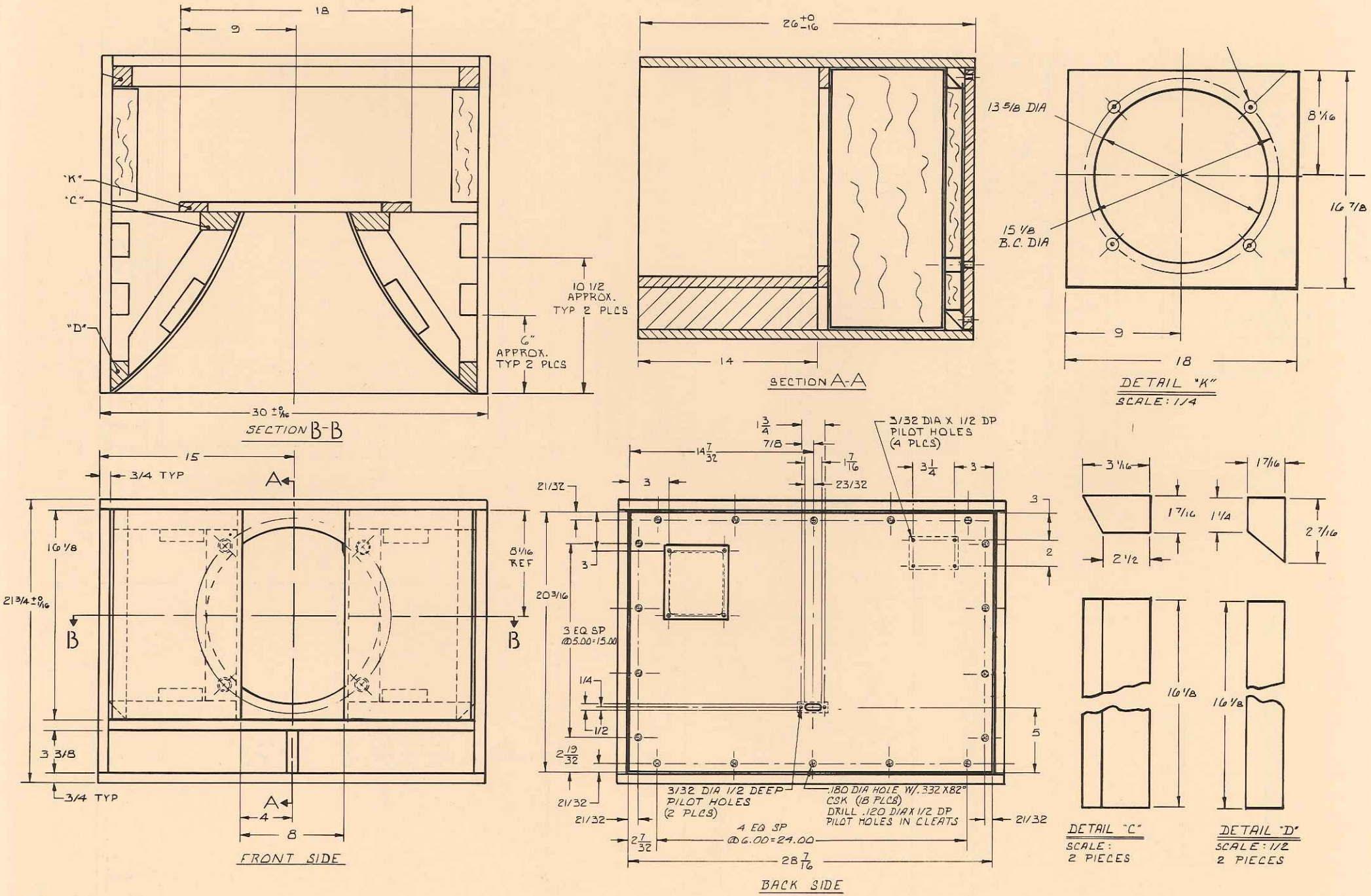
18
9
"K"
"C"
"D"
10 1/2 APPROX. TYP 2 PLCS
6" APPROX. TYP 2 PLCS
30 ±0/16
SECTION B-B
26 +0/-16
14
SECTION A-A
13 5/8 DIA
15 1/8 B.C. DIA
8 1/16
16 7/8
9
18
DETAIL "K"
SCALE: 1/4
15
3/4 TYP
A
16 1/8
21 3/4 ±0/16
B
8 1/16 REF
3 3/8
3/4 TYP
4
8
FRONT SIDE
3/32 DIA X 1/2 DP PILOT HOLES (4 PLCS)
14 7/32
7/8
1 7/16
23/32
3 1/4
21/32
20 3/16
3 EQ SP @5.00=15.00
1/4
1/2
2 19/32
5
3/32 DIA 1/2 DEEP PILOT HOLES (2 PLCS)
.180 DIA HOLE W/.332 X 82° CSK (18 PLCS) DRILL .120 DIA X 1/2 DP PILOT HOLES IN CLEATS
4 EQ SP @6.00=24.00
2 7/32
28 7/16
BACK SIDE
3 1/16
1 7/16
2 1/2
17/16
1 1/4
2 7/16
16 1/8
DETAIL "C"
SCALE:
2 PIECES
DETAIL "D"
SCALE: 1/2
2 PIECES

816 Cabinet

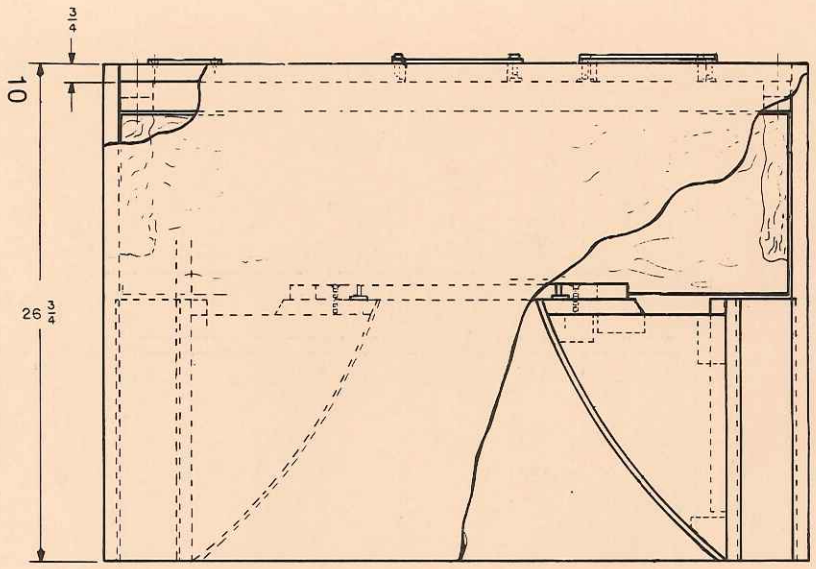

TOP VIEW

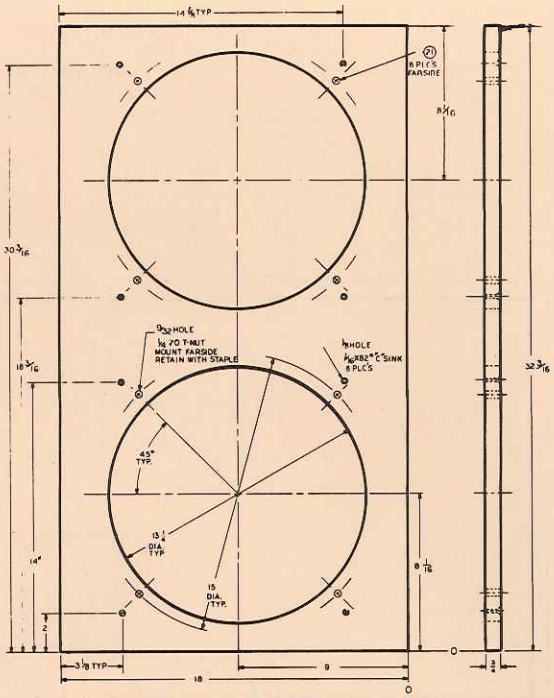

SPEAKER MOUNTING BOARD

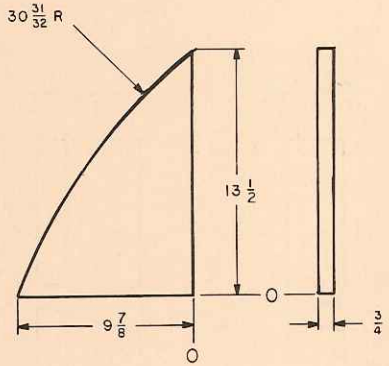

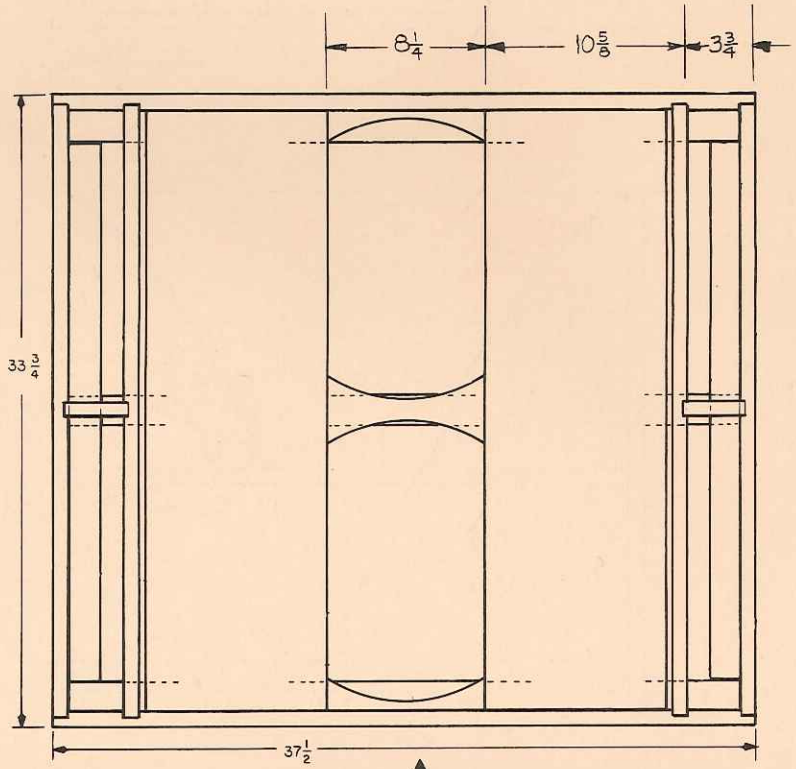

FRONT VIEW

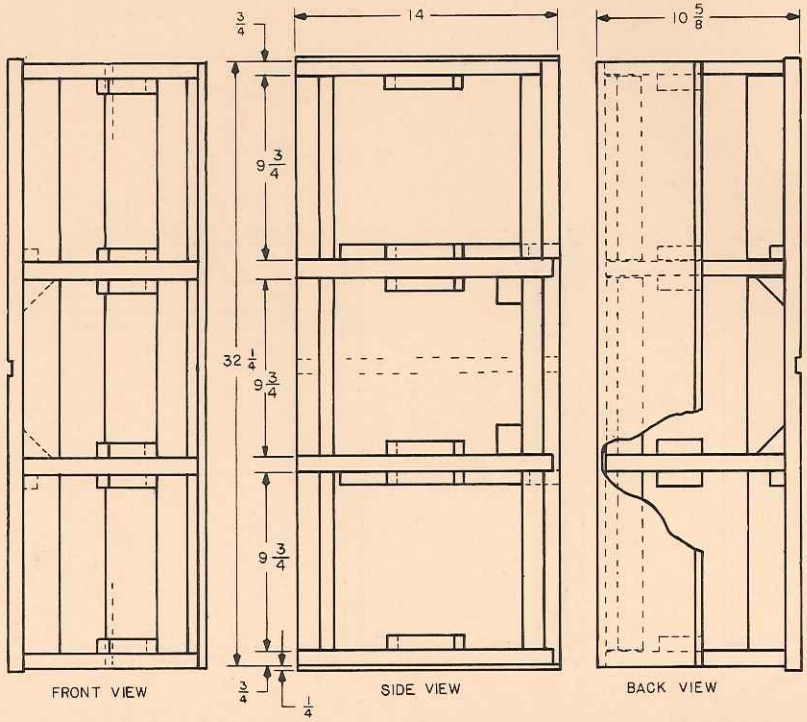

FRONT VIEW SIDE VIEW BACK VIEW

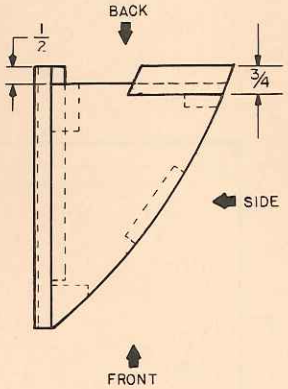

HORN SIDE ASSEMBLY

817 Cabinet

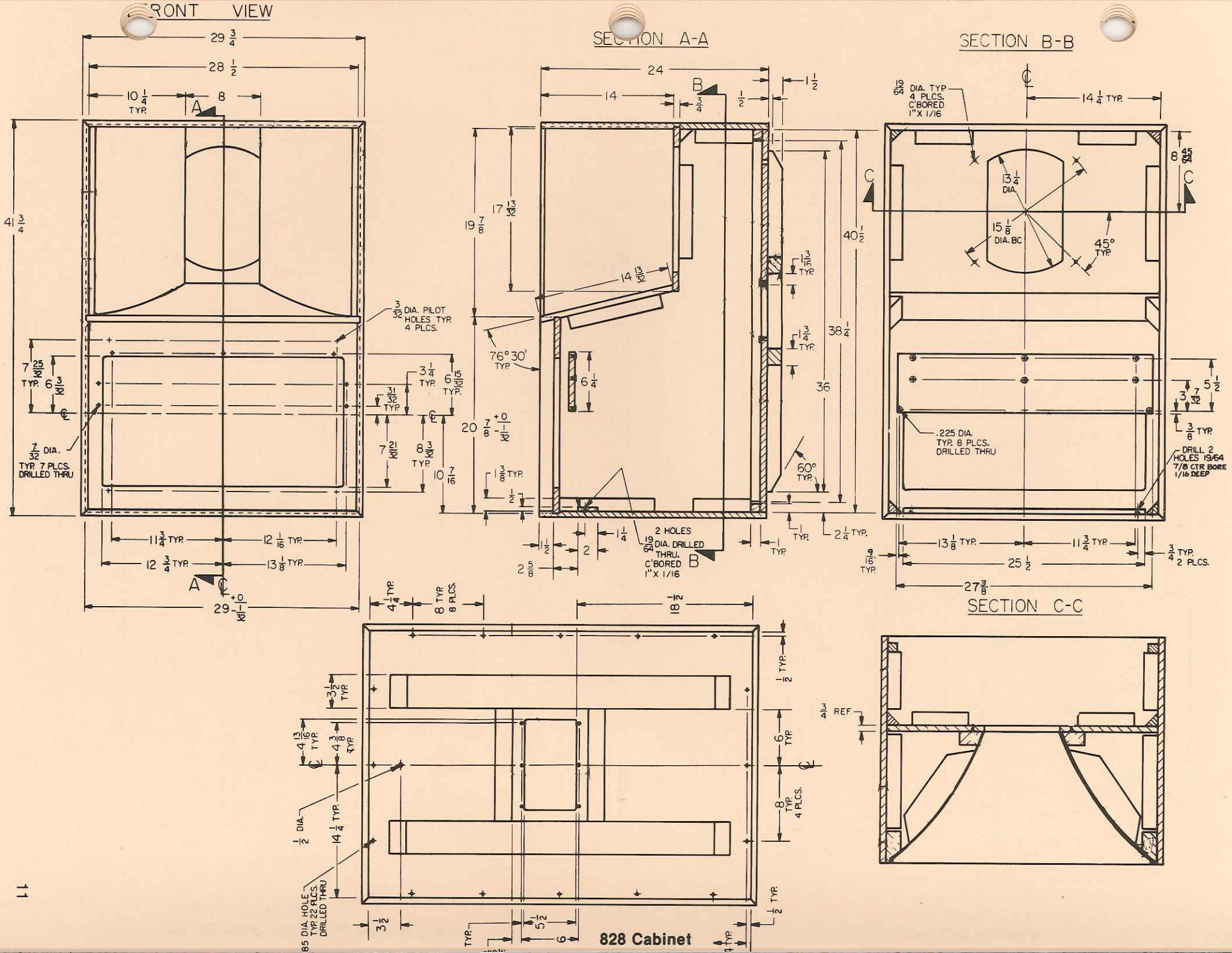
FRONT VIEW
SECTION A-A
SECTION B-B
SECTION C-C
29 3/4
28 1/2
10 1/4 TYP.
8
41 3/4
3/32 DIA. PILOT HOLES TYP. 4 PLCS.
7 25/32 TYP.
6 3/32
7/32 DIA. TYP. 7 PLCS. DRILLED THRU
3 1/4 TYP.
6 15/32 TYP.
31/32 TYP.
7 21/32
8 3/32 TYP.
10 7/16
11 3/4 TYP.
12 1/16 TYP.
12 3/4 TYP.
13 1/8 TYP.
29 +0/-1/32
24
14
3/4
1/2
1 1/2
19 7/8
17 13/32
14 13/32
76° 30' TYP.
6 1/4
20 7/8 +0/-1/32
1 3/8 TYP.
1/2
1 3/16 TYP.
1 3/4 TYP.
40 1/2
38 1/4
36
60° TYP.
1 TYP.
2 1/4 TYP.
1 1/2
2
1 1/4
2 5/8
19/64 DIA. DRILLED THRU. C'BORED 1" X 1/16
2 HOLES
19/64 DIA. TYP. 4 PLCS. C'BORED 1" X 1/16
14 1/4 TYP.
8 45/64
13 1/4 DIA.
15 1/8 DIA. BC
45° TYP.
5 1/2
3 7/32
3/8 TYP.
.225 DIA. TYP. 8 PLCS. DRILLED THRU
DRILL 2 HOLES 19/64 7/8 CTR BORE 1/16 DEEP
13 1/8 TYP.
11 3/4 TYP.
9/16 TYP.
25 1/2
3/4 TYP. 2 PLCS.
27 3/8
4 1/4 TYP.
8 TYP. 8 PLCS.
18 1/2
3 1/2 TYP.
4 13/16 TYP.
4 3/8 TYP.
1/2 DIA.
14 1/4 TYP.
.85 DIA. HOLE TYP. 22 PLCS. DRILLED THRU
1/2 TYP.
6 TYP.
8 TYP. 4 PLCS.
3 1/2
5 1/2
6
4 TYP.
3/4 REF.

828 Cabinet

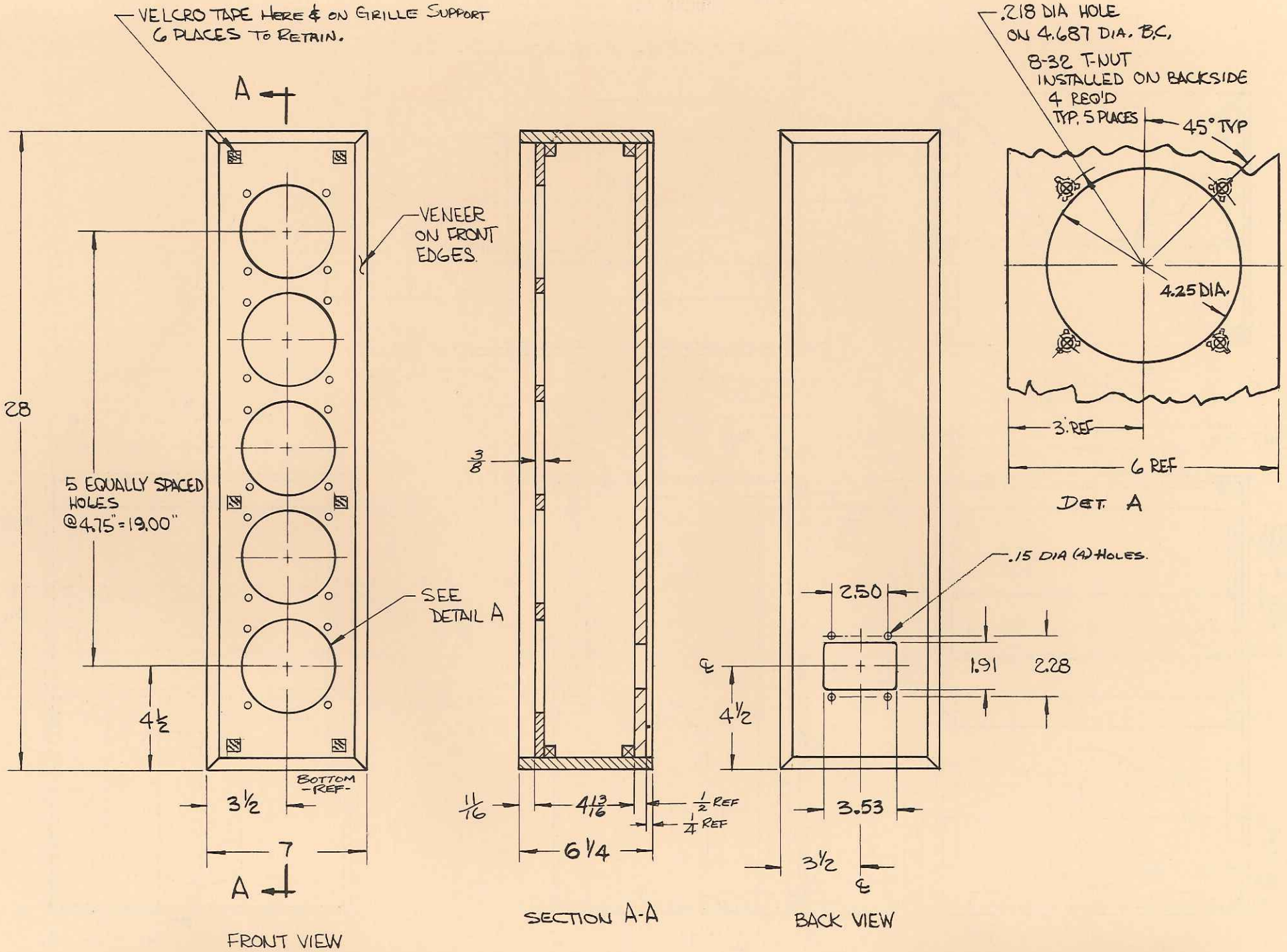

Cabinet for 849 Column Loudspeaker

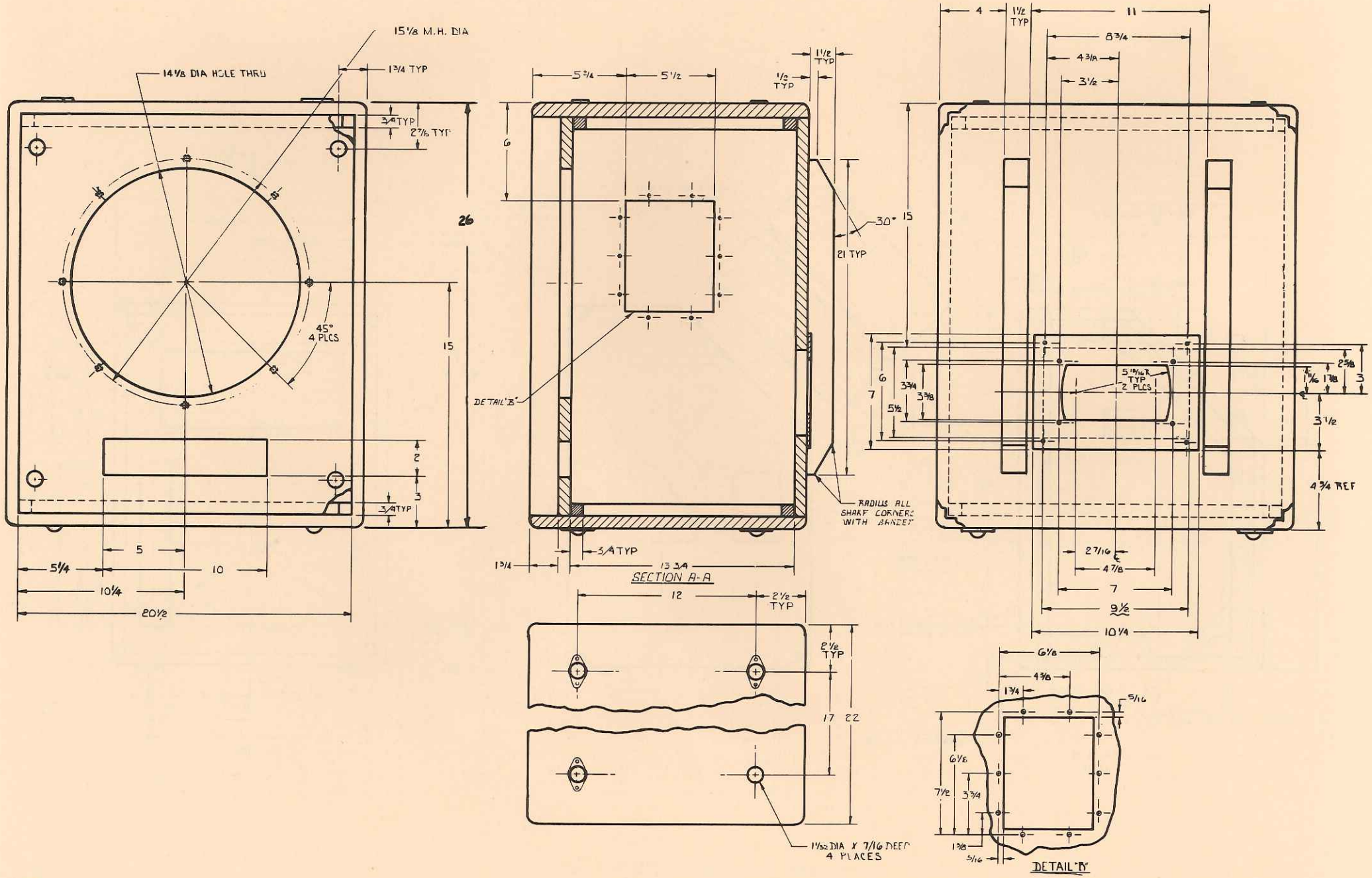
15 1/8 M.H. DIA
14 1/8 DIA HOLE THRU
1 3/4 TYP
3/4 TYP
2 7/8 TYP
26
15
45°
4 PLCS
2
3
3/4 TYP
5
5 1/4
10
10 1/4
20 1/2
5 3/4
5 1/2
1 1/2 TYP
1/2 TYP
6
30°
21 TYP
DETAIL "B"
RADIUS ALL SHARP CORNERS WITH BANDEX
3/4 TYP
1 3/4
13 3/4
SECTION A-A
12
2 1/2 TYP
2 1/2 TYP
17
22
1 1/32 DIA X 7/16 DEEP 4 PLACES
4
1 1/2 TYP
11
8 3/4
4 3/8
3 1/2
15
6
7
3 3/4
3 3/8
5 1/2
5 13/16 TYP 2 PLCS
2 5/8
1 1/16
1 7/8
3
3 1/2
4 3/4 REF
2 7/16
4 7/8
7
9 1/2
10 1/4
6 1/8
4 3/8
1 3/4
5/16
6 1/8
7 1/2
3 3/4
1 3/8
5/16
DETAIL "A"

930 Cabinet

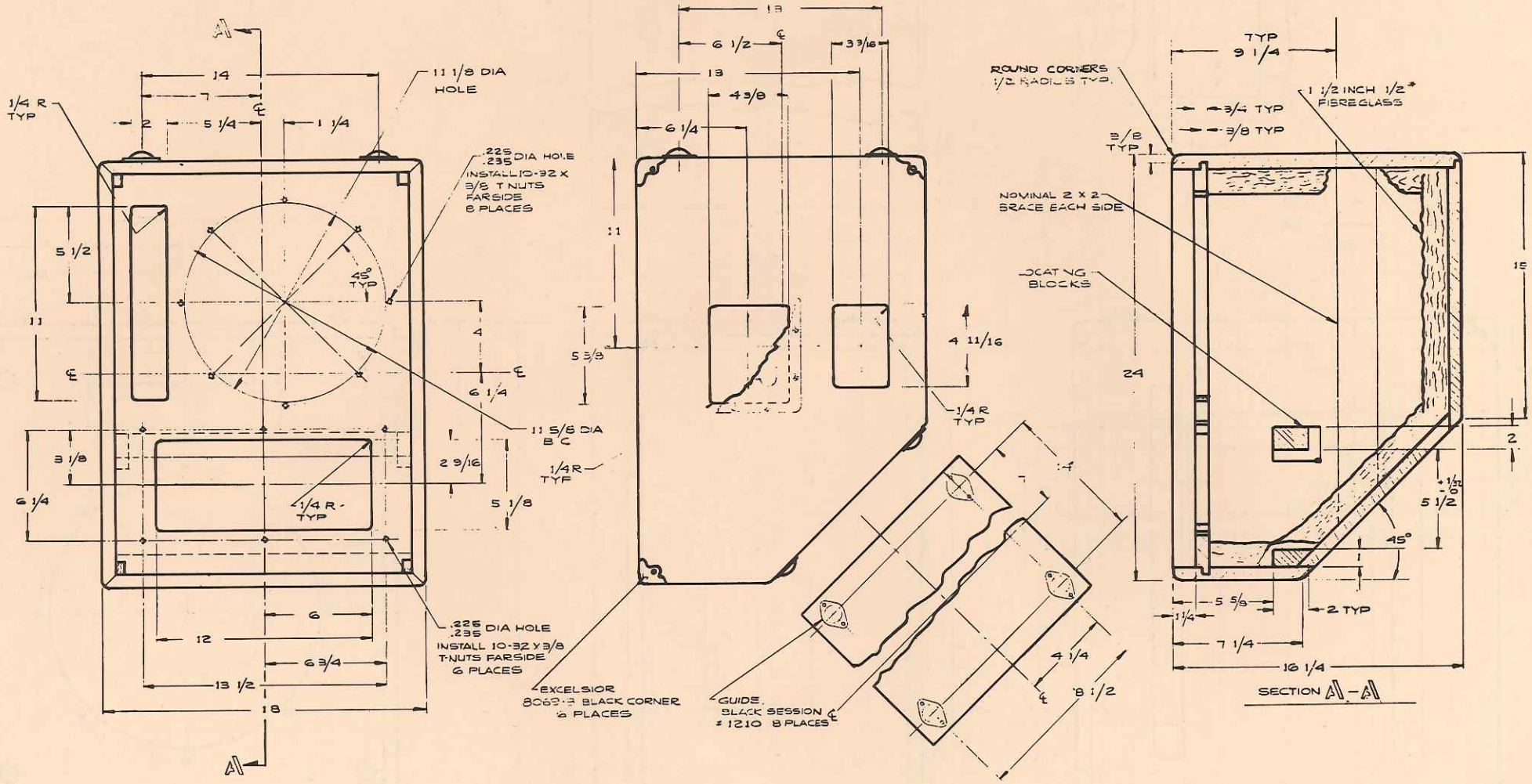
A
14
7
2
5 1/4
1 1/4
11 1/8 DIA HOLE
1/4 R TYP
.225 .235 DIA HOLE INSTALL 10-32 X 3/8 T NUTS FARSIDE 8 PLACES
5 1/2
45° TYP
11
4
6 1/4
11 5/8 DIA B C
3 1/8
2 9/16
1/4 R TYP
5 1/8
6 1/4
6
12
6 3/4
13 1/2
18
.225 .235 DIA HOLE INSTALL 10-32 X 3/8 T-NUTS FARSIDE 6 PLACES
A
13
6 1/2
3 3/16
13
4 3/8
6 1/4
11
5 3/8
4 11/16
1/4 R TYP
EXCELSIOR 8069-3 BLACK CORNER 6 PLACES
GUIDE, BLACK SESSION # 1210 8 PLACES
14
7
4 1/4
8 1/2
TYP 9 1/4
ROUND CORNERS 1/2 RADIUS TYP.
1 1/2 INCH 1/2* FIBREGLASS
3/4 TYP
3/8 TYP
3/8 TYP
NOVINAL 2 X 2 BRACE EACH SIDE
LOCATING BLOCKS
24
15
2
5 1/2
45°
5 5/8
1 1/4
2 TYP
7 1/4
16 1/4
SECTION A-A

937 Cabinet

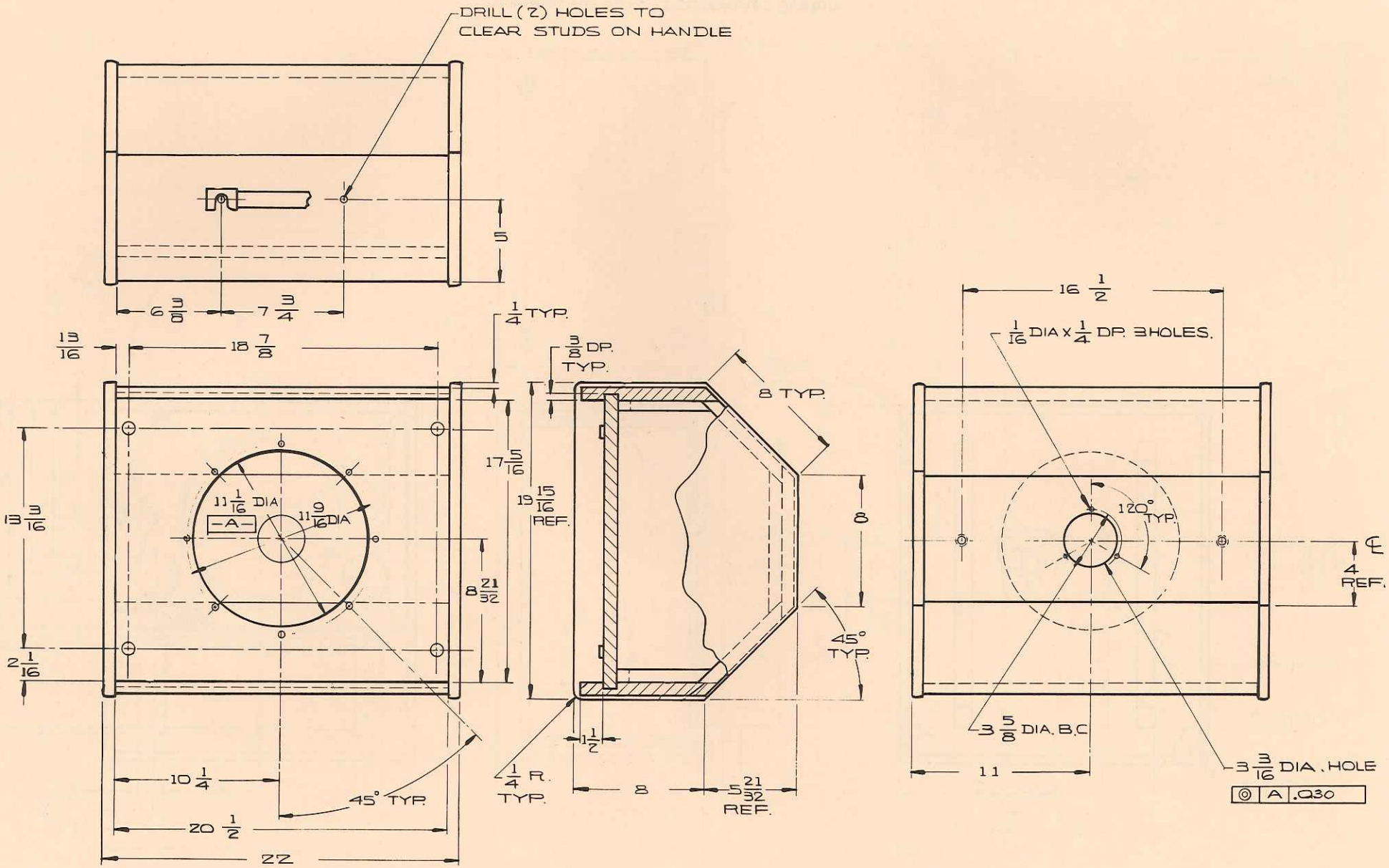

Cabinet for 1230 Loudspeaker System

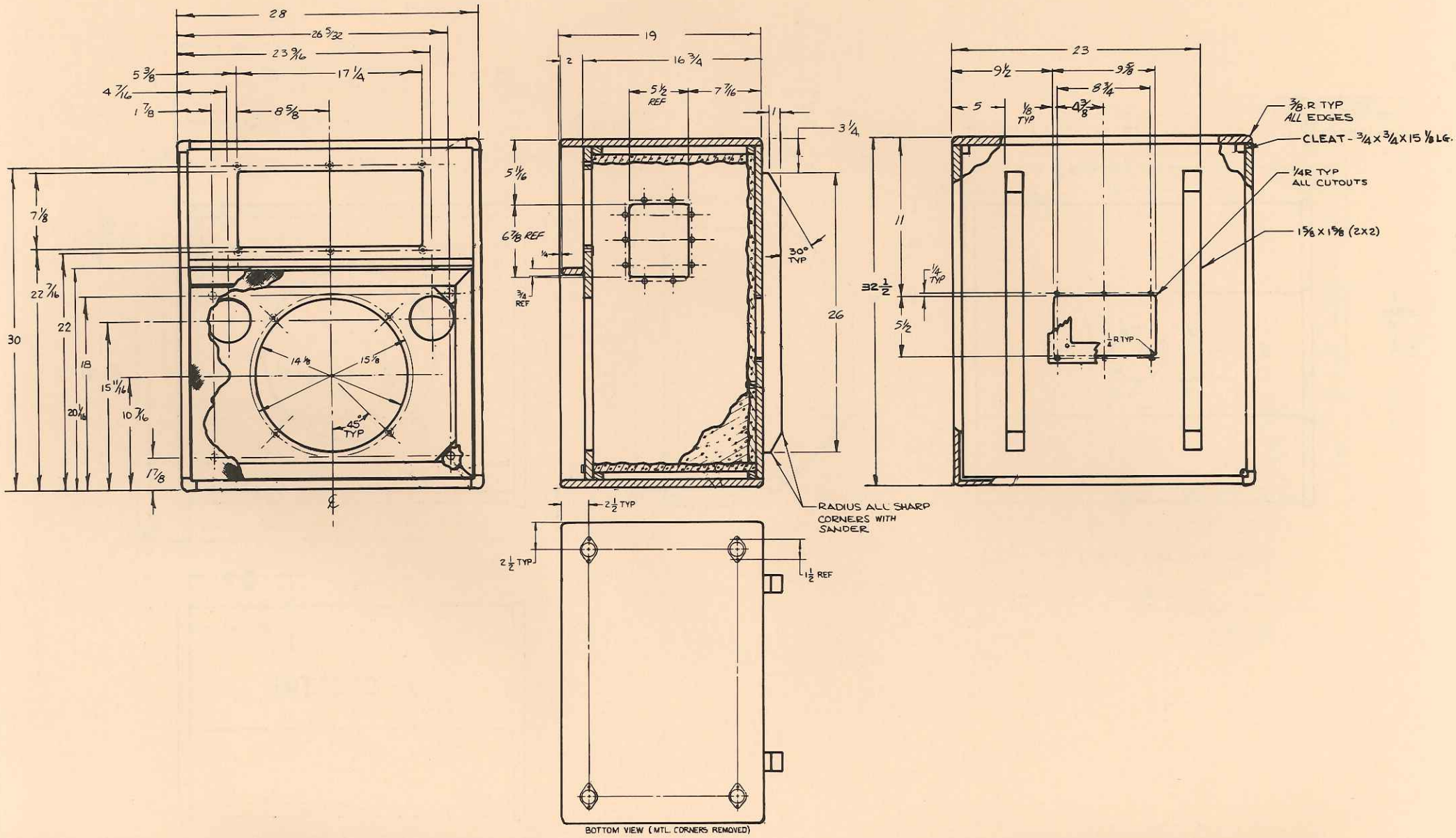

Cabinet for 1233 Loudspeaker System

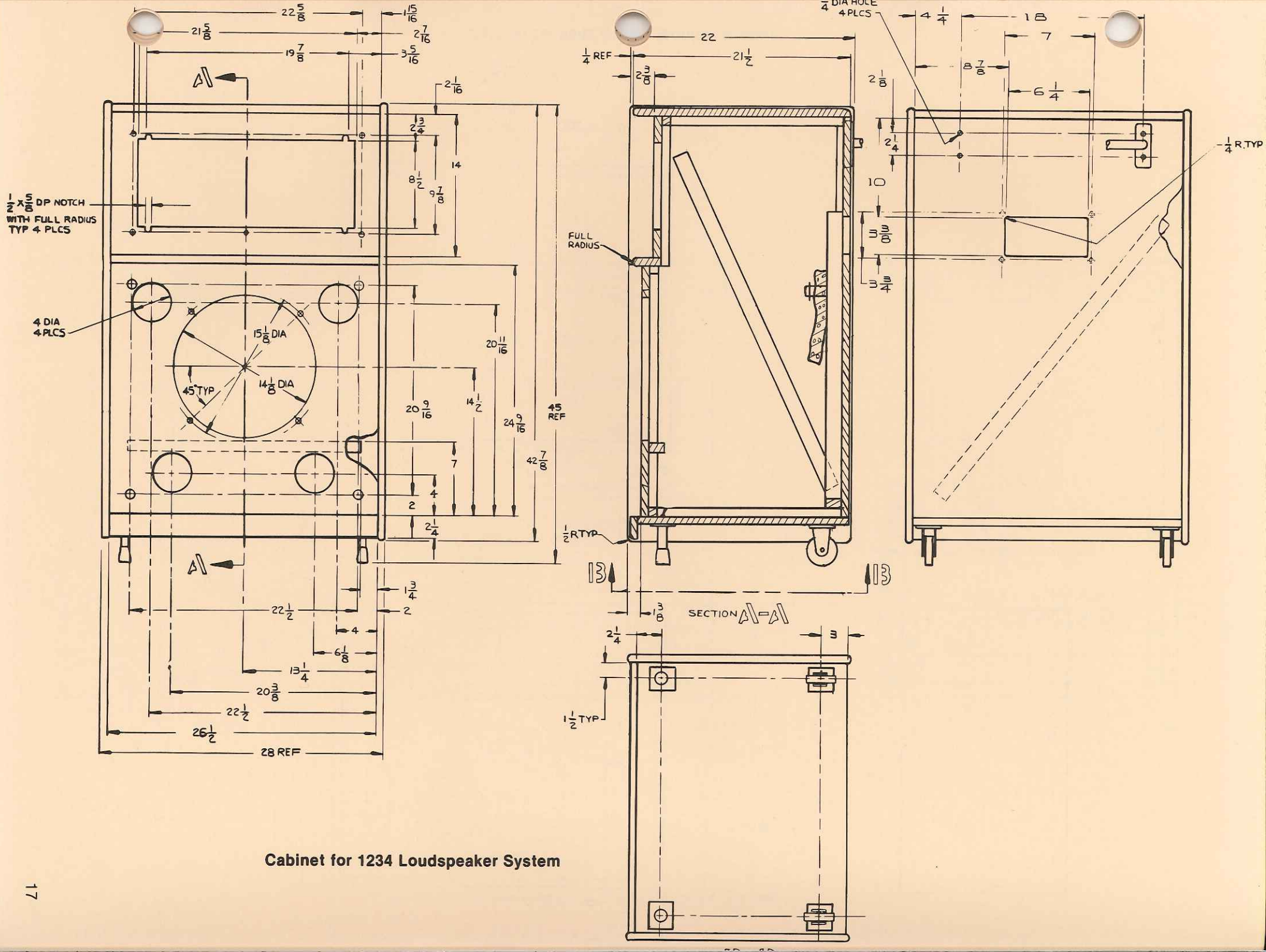

Cabinet for 1234 Loudspeaker System

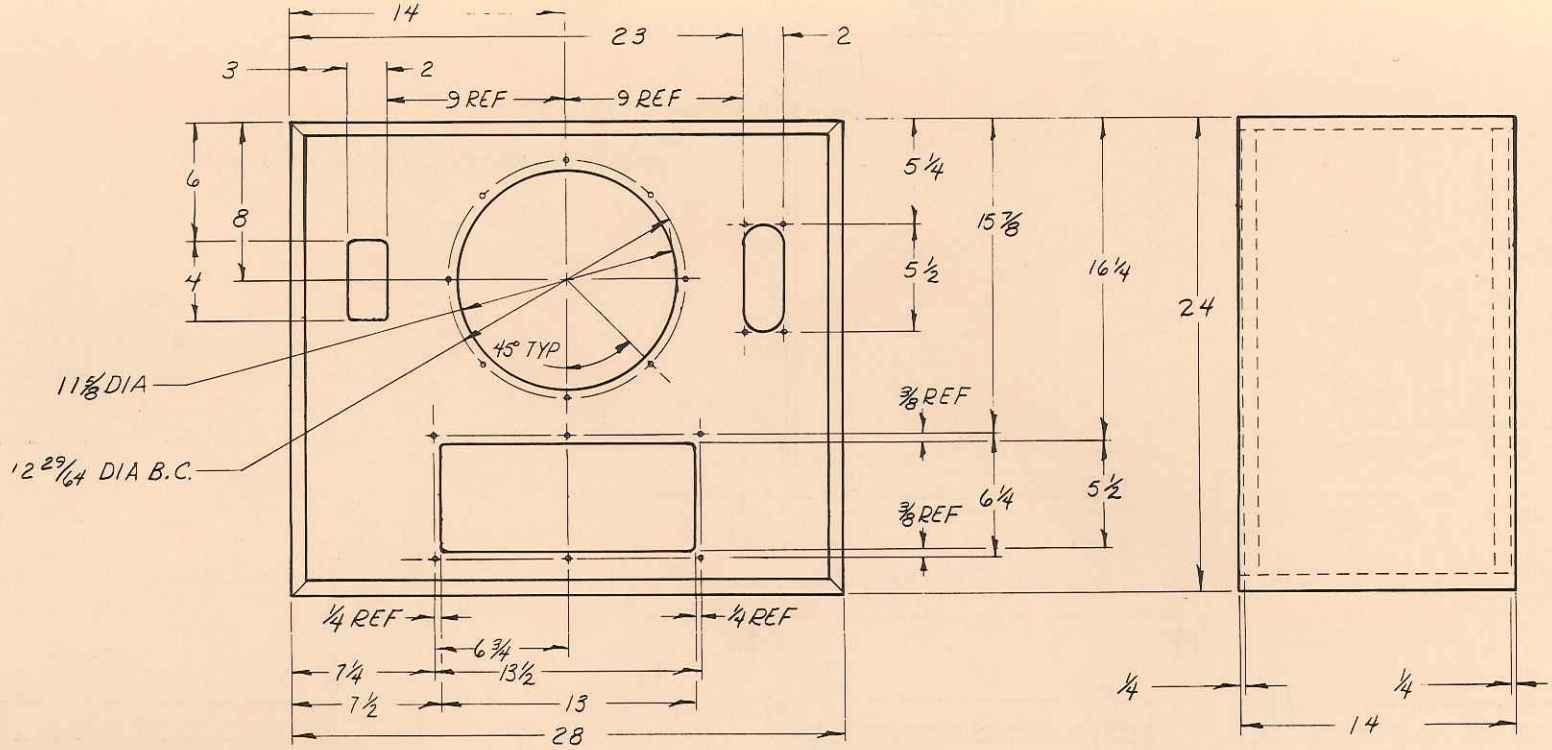
14
23
2
3
2
9 REF
9 REF
6
8
4
5 1/4
15 7/8
5 1/2
16 1/4
24
45° TYP
11 5/8 DIA
12 29/64 DIA B.C.
3/8 REF
3/8 REF
6 1/4
5 1/2
1/4 REF
1/4 REF
6 3/4
7 1/4
13 1/2
7 1/2
13
28
1/4
1/4
14

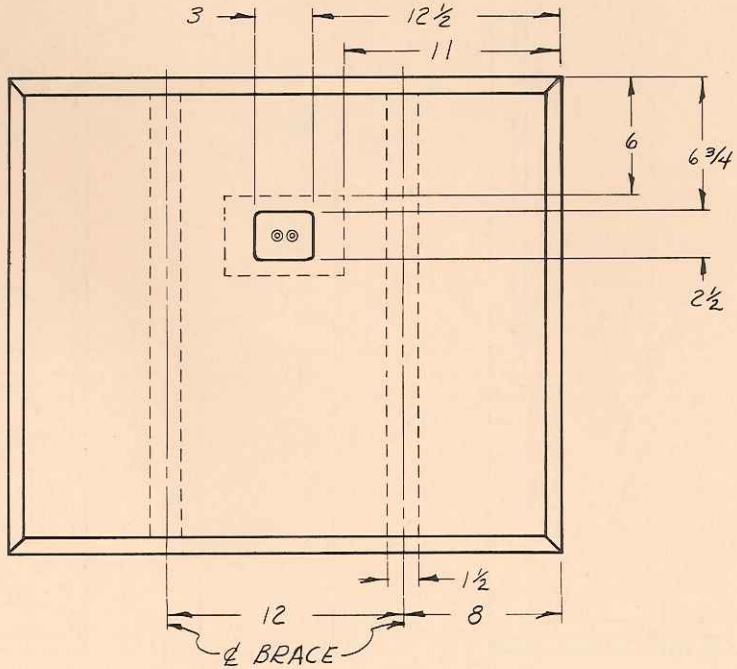
3
12 1/2
11
6
6 3/4
2 1/2
1 1/2
12
8
℄ BRACE

REAR VIEW

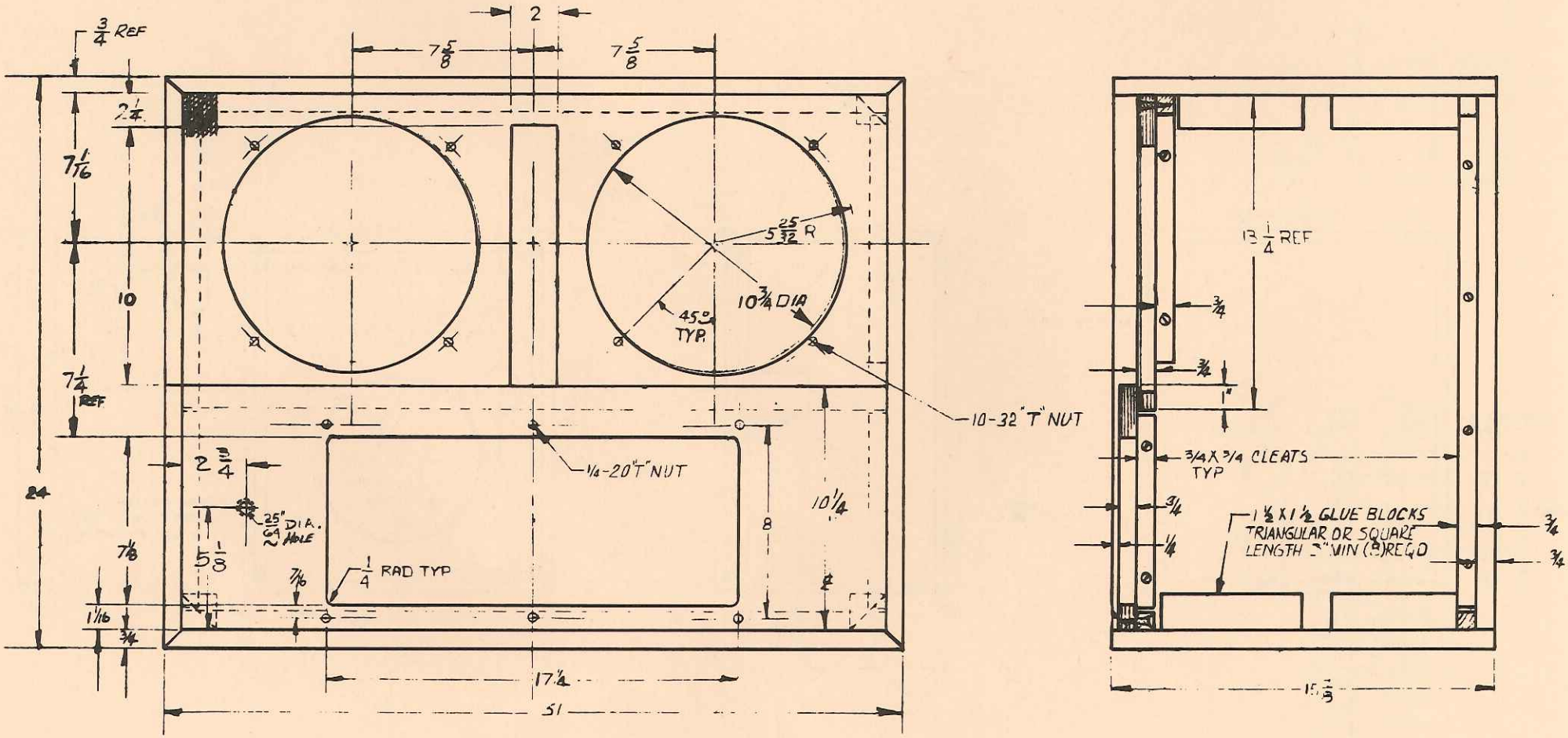

Cabinet for 9844 Studio Monitor System

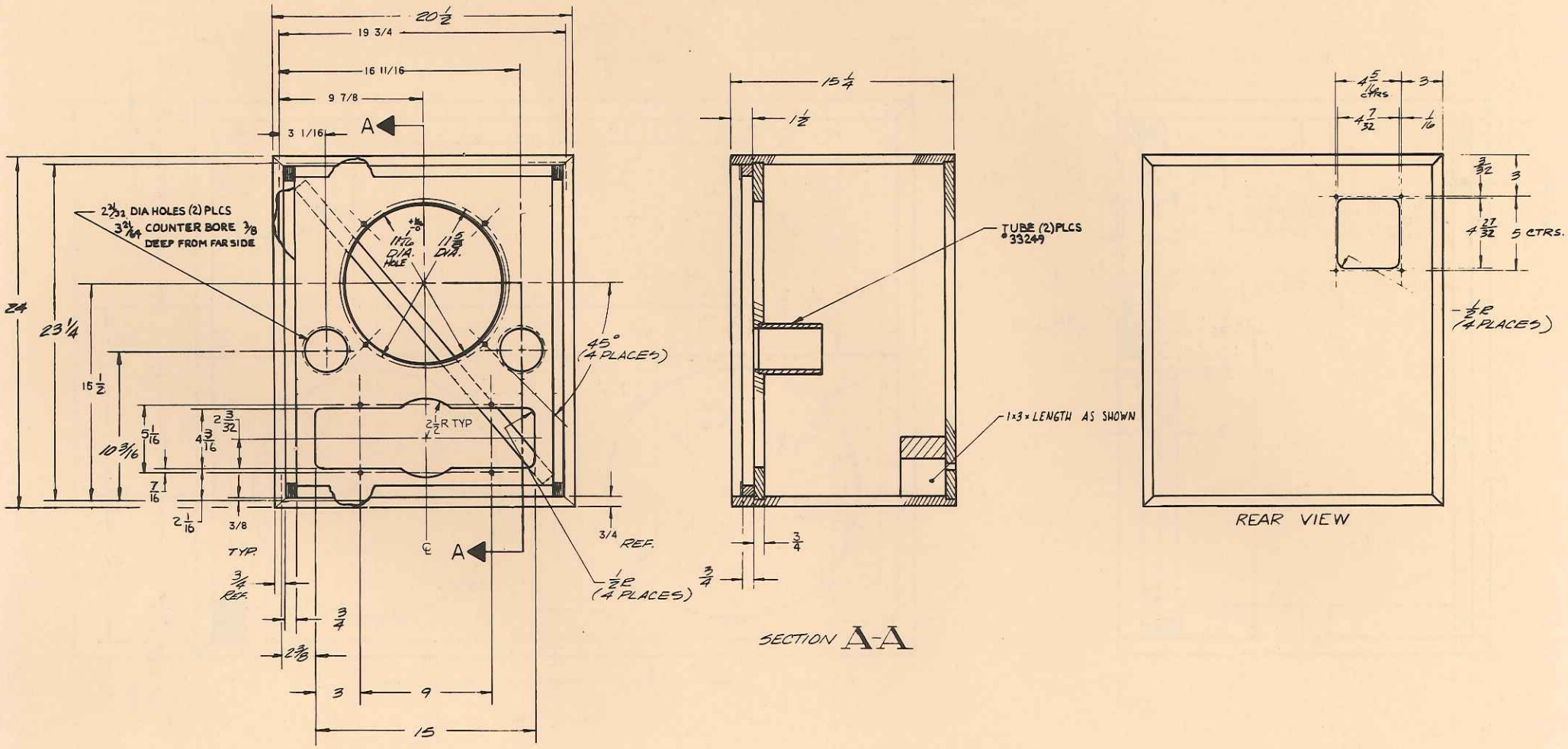

Cabinet for 9849 Studio Monitor System